MACHINERY DIVISION
6465 18 MILE ROAD
STERLING HEIGHTS, MI 48314
PHONE:
(586) 731-3600 • 1-800-860-1740
FAX:
(586) 731-7464 • 1-800-862-1740

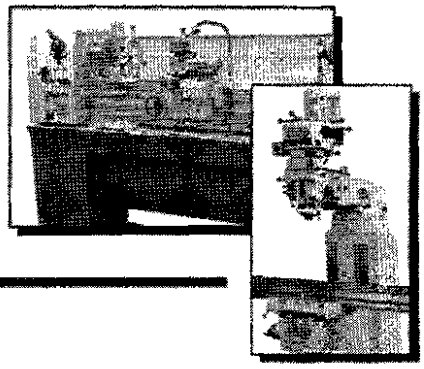

MODEL 600B
DRILL PRESS

THANK YOU FOR PURCHASING WITH KBC MACHINERY. ALL KBC MACHINES ARE BACKED BY OUR 1 YEAR PARTS REPLACEMENT WARRANTY. WHEN USED AS INTENDED, AND WITH PROPER MAINTENANCE THIS MACHINE WILL PROVIDE YOU WITH YEARS OF TROUBLE-FREE SERVICE. IF YOU NEED PARTS SIMPLY FILL OUT THE PARTS REQUEST FORM, AND FAX OR E-MAIL YOUR REQUEST. ALL OTHER QUESTIONS PLEASE CONTACT US @ :

KBC MACHINERY
6465 18 MILE ROAD
STERLING HEIGHTS,MI 48314
PH (800) 860-1740
FAX (800) 862-1740
MACHINERY@KBCTOOLS.COM
WWW.KBCTOOLSANDMACHINERY.COM

PARTS REQUEST FORM

YOUR COMPANY NAME: _____
STATE/PROVINCE _____
YOUR NAME _____

PHONE # + EXT _____
FAX # _____

MACHINE INFO:
MAKE/MANFACTURER _____

MODEL NUMBER _____
YEAR MADE _____

SERIAL# _____

PARTS REQUESTED:

PART#	DESCRIPTION

PLEASE INCLUDE COPY(S) OF THE PARTS DRAWING FROM THE MANUAL AND CIRCLE THE PARTS NEEDED

FAX PARTS REQUEST TO (800) 862-1740
E-MAIL PARTS REQUEST TO: machinery@kbctools.com

THANKS; KBC MACHINERY - MICHIGAN

kBC machinery

POWERFUL VERTICAL DRILLING MACHINE

S600B

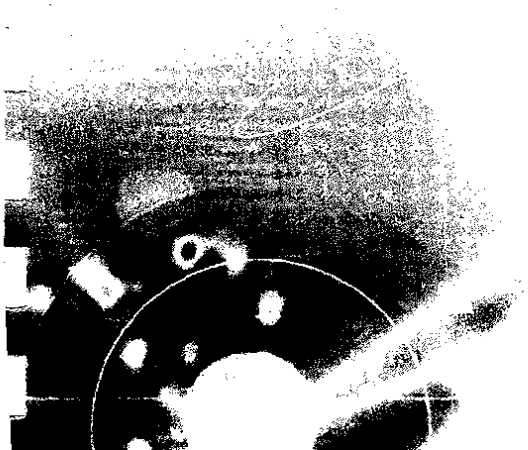

INSTRUCTIONS MANUAL OF POWERFUL VERTICAL DRILL MACHINES

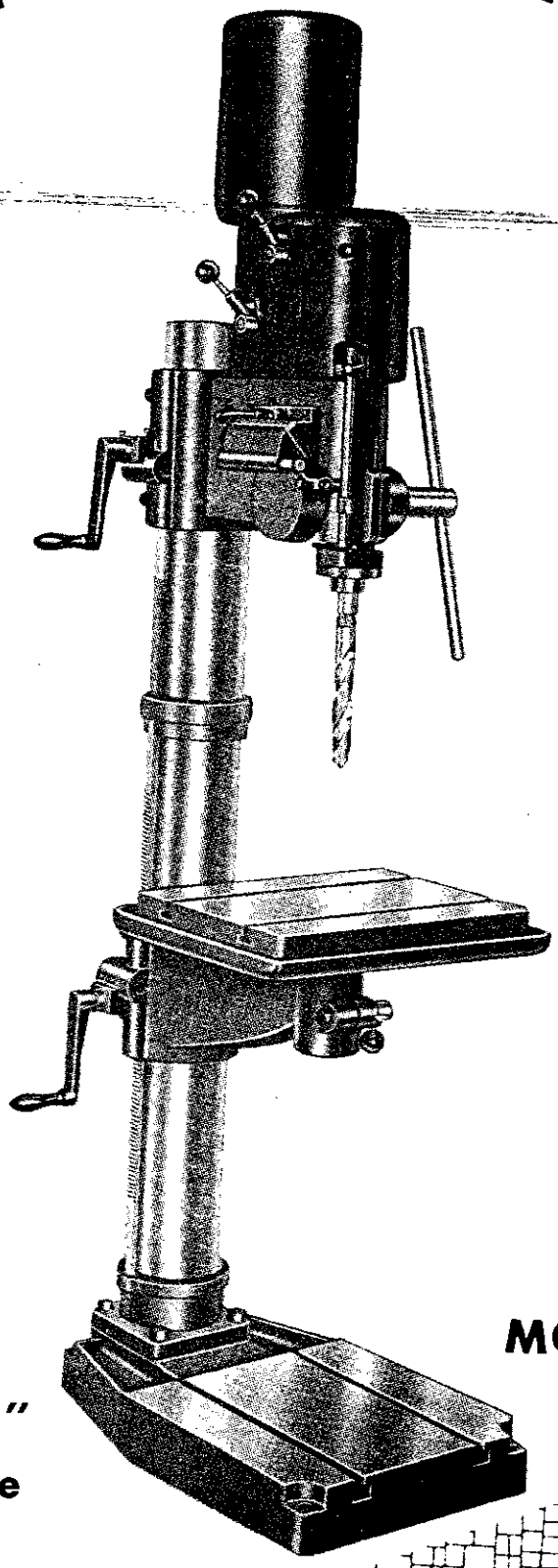

S600 A/B

MODEL S 600B

- Drilling capacity 1½"
- Power feed to spindle
- built-in drill ejector

NOTICE

PLEASE READ BEFORE OPERATING MACHINE.

This maunal is to assist you getting complete efficiency and prolong the service life of the machine.

Please quote the serial number of the machine in all communication.

INSTALLATION OF MACHINE

LINCRATING

When you receive the shipment please make sure if the machine has been damanged in transit.

If any damage occurrs inform at once the shipping company or insurance company. Then carefully remove protective crating and skids so that the machine will not be impaired.

CLEANING

All machine surfaces have been covered with anticorrosive during transit. This stuff should be thoroughly cleaned off before operation.

INDEX

INSTALLATION OF MACHINE (1)
BEIEF SPECIFICATION····· (2)
DIMENSIONED SKETCH·····(2)
MACHINE ASSEMBLY····· (3)
ELECTRIC SUPPLY····· (4)
TAPPING····· (4)
CONTROL DAIGRAN····· (5)
WIRING DAIGRAN····· (5)
SPEED CHANGE····· (5)
AUTO FEED OTHSPINDLE··· (5)
SPEED CHANGE····· (5)
LUBRICATION····· (6)
MACHINE ALIGNMENT·····(6)
PART DRAWING····· (7)
PART DRAWING····· (8)
PART DRAWING····· (9)
PART DRAWING····· (10)
PART DRAWING····· (11)
PART LIST····· (12)
PART LIST····· (13)
PART LIST····· (14)
PART LIST····· (14)

BEIEF SPECIFICATION

	S 600A	S 600B
Distance from centre of drill spindle to column	12″	12″
Max. distance from spindle nose to table	32½″	32½″
Max. distance from spindle nose to baseplate	47″	47″
Diameter of ground column	5½″	5½″
Table size	15¾″	20″×16″
Working surface of standard baseplate	16×16½″	16×16½″
Quill movement	6⅝″	6⅝″
Spindle bore, Morse taper ... M. T. No.	4	4
Max. drilling capacity in steel	1½″	1½″
No. of spindle speeds	8	8
Range of spindle speeds ... r.p.m.	80, 125	80, 125
	160, 250	160, 250
	300, 475	300, 475
	600, 950	600, 950
Rate of power feed per rev. of spindle	.004″-.007″	0.004″-0.007″
H.P. of pole change motor, 3-phase A.C., 60 cycles,	1.5/2.2	1.5/2.2
Nett weight (unpacked)	330KGS	330KGS
Grass weight	380KGS	380KGS
Packing size ... L×W×H	(A) 32½″×26″×85″	(B) 32½″×26″×85″
MEASUREMENT	41cft/1set	41cft/1set

DIMENSIONED SKETCH

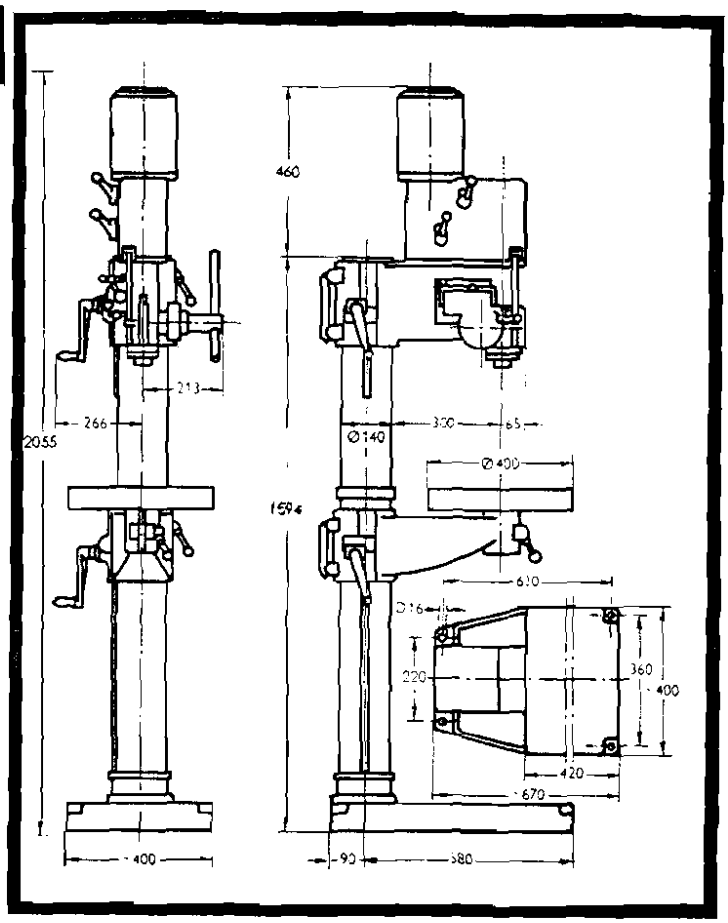

S600A S600B

(2) MACHINE ASSEMBLY

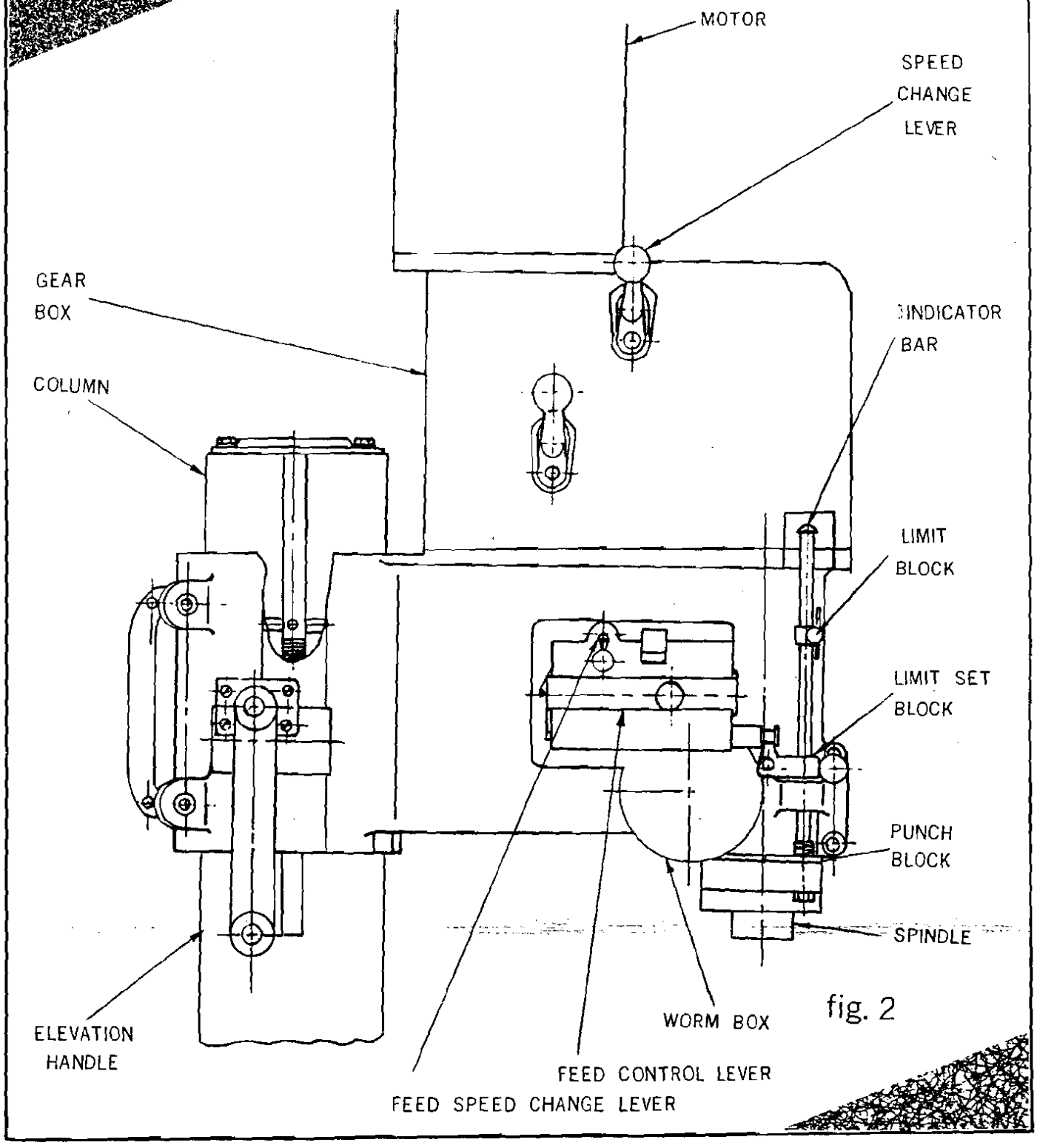

fig. 2

ELECTRIC SUPPLY

The control station of electricity are devided into 3 switches.

The first one is poles change switch, (fig. 3) the second one is select switch, (fig. 3) the third one is pedal switch(Foot Switch).Pole change switch control the "high" or "low" speed of motor. The select switch is for drilling or tapping selection. When select switch is put on for tapping function the pedul switch is control the change of forward rotation and reverse rotation. When select switch is put on for drilling function, the pedal switch are for selection of stop and rotation.

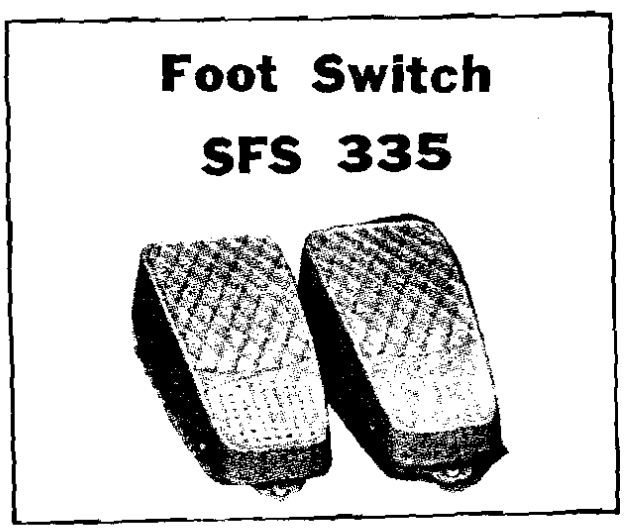

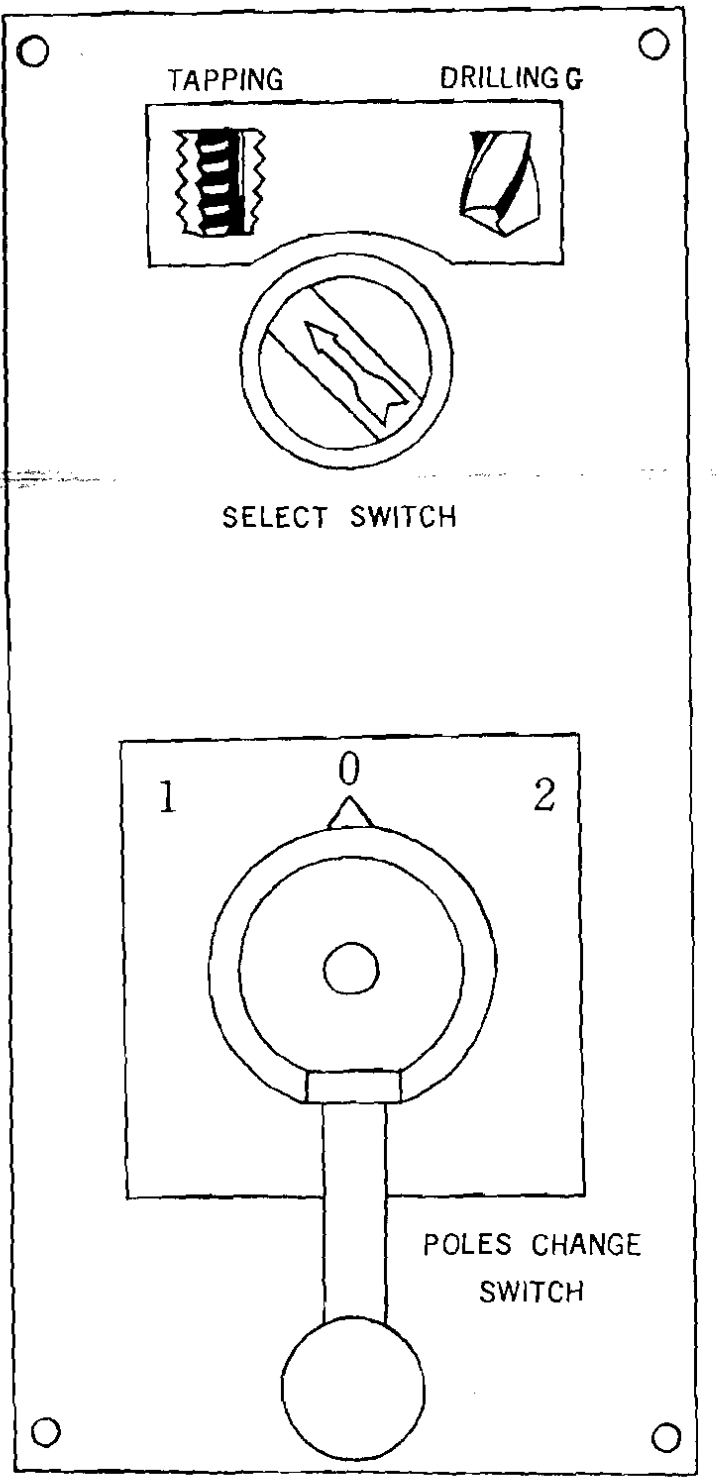

fig. 3

TAPPING

When tapping please operate at low speed of motor, so the motor s service life will be prolonged. Please be assure do not push down ward the auto-feed lever. (fig. 2) You must the lever at neutrol position. When in operation all the lock handles should be put to locking position.

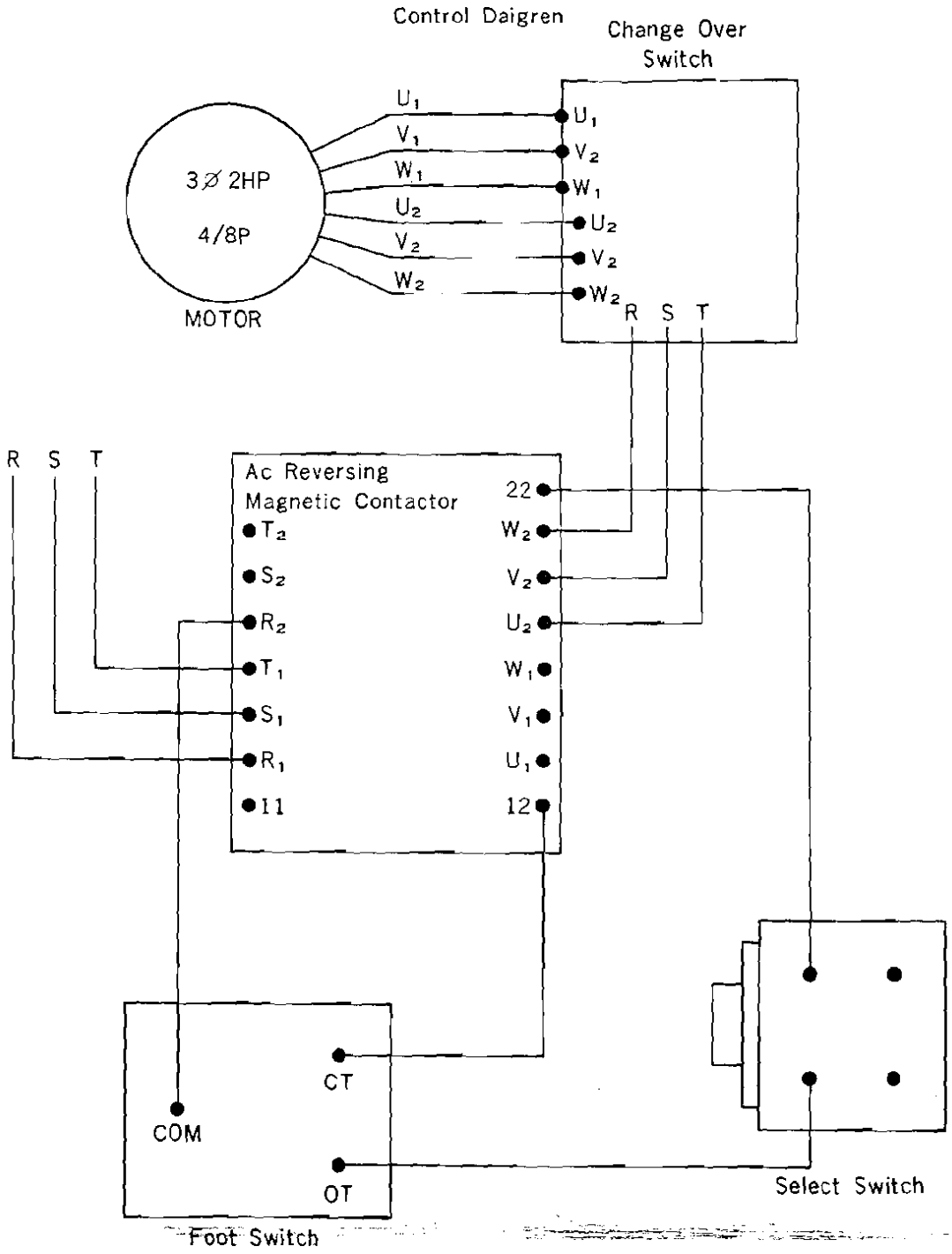

MCF: FOR Magnetic Contactor.....

Spindie For. & Rev. (Interlook)

MCR: Rev Magnetic Contactor.....

SS: Select Switch.....Tapping or Drilling select

PCS: Poles change switch.....2p & 4p (or 4p & 8p) Change

SPEED CHANGE

The speed change can be done suring operation of machine. The 2 speed change lever (fig. 2) control 4 rinds of speed. You may Refer to the speed table.

fig. 4

AUTO FEED OF SPINDLE

The auto feed worm box (fig. 2) is equipped at left side botton of head part. the auto feed is with two speed, respectively, 0.004" and 0.007". (fig. 5)

When drawing the auto feed lever (fig. 2) downward, you can get auto feed.

The depth of auto feed can be controlled by indicator bar. And take advantage of the limit block. (fig. 2) Built-in Drill Ejector equipment is for taking off the drill chuck. Affer taking off the punch block and moving the quill upward you can take off the drill chuck.

SPEED CHANGE

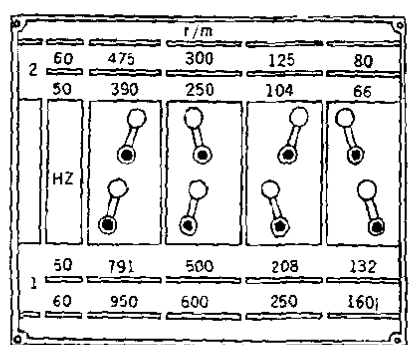

fig. 4

LUBRICATION

This machine is designed for simple maintenance as the lubrications are built-in.

The only lubrication needed the simple surface oiling and the oil nozzles need to be refilled occassionally.

MACHINE ALIGNMENT

Every machine is carefully inspected and equipped with an accurate record. Chuck alignments and levelling at regular periods will ensure you the maximun performance of machine.

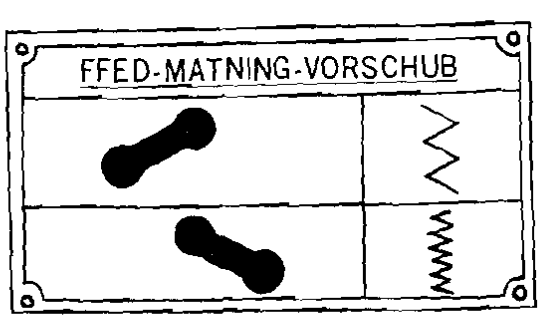

fig. 5

NOTICE

When ordering parts or making enquries. Please quote model number, part number.

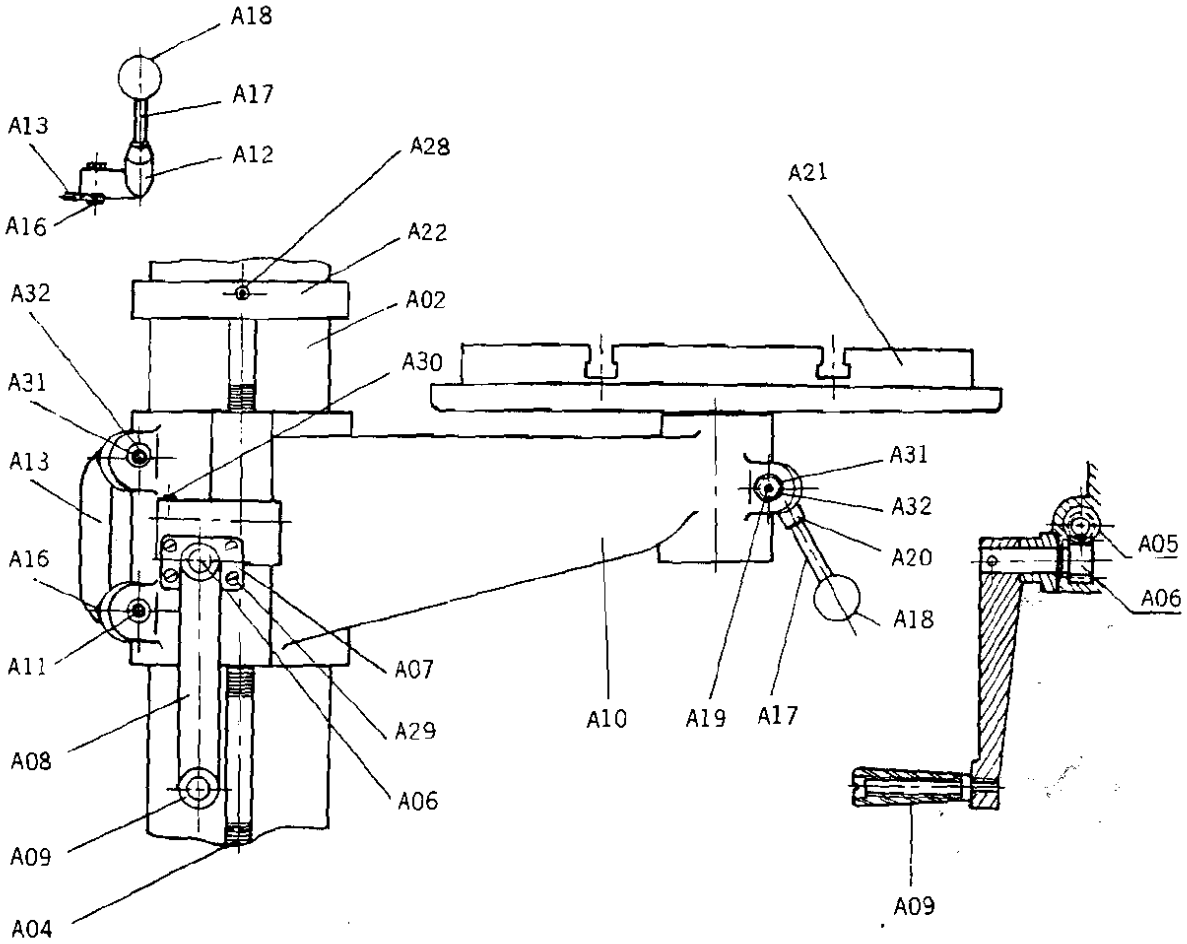
A18
A17
A13
A12
A16
A28
A22
A21
A32
A02
A30
A31
A13
A16
A11
A08
A09
A04
A07
A29
A06
A31
A32
A20
A18
A10
A19
A17
A05
A06
A09

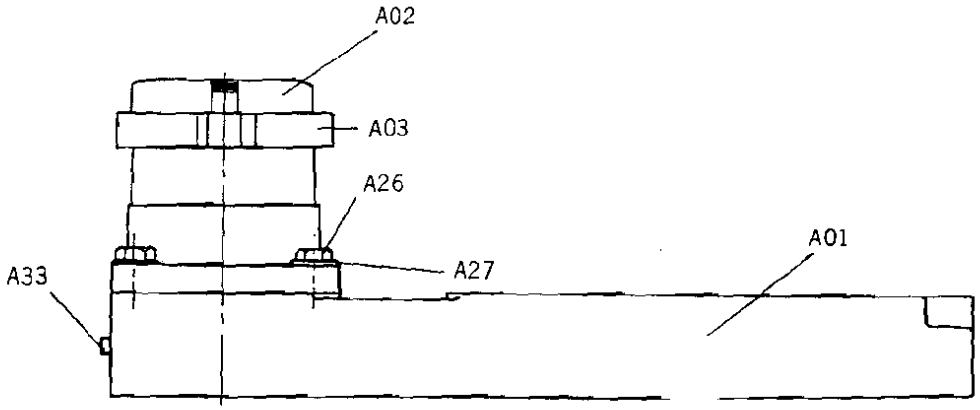
A02
A03
A26
A27
A01
A33

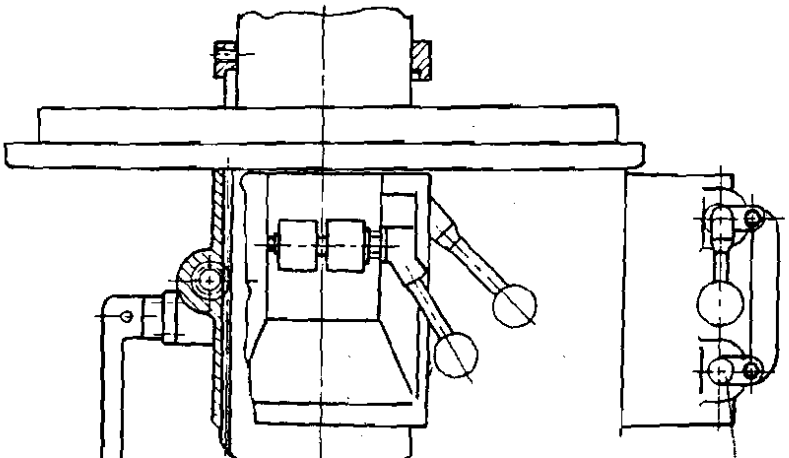

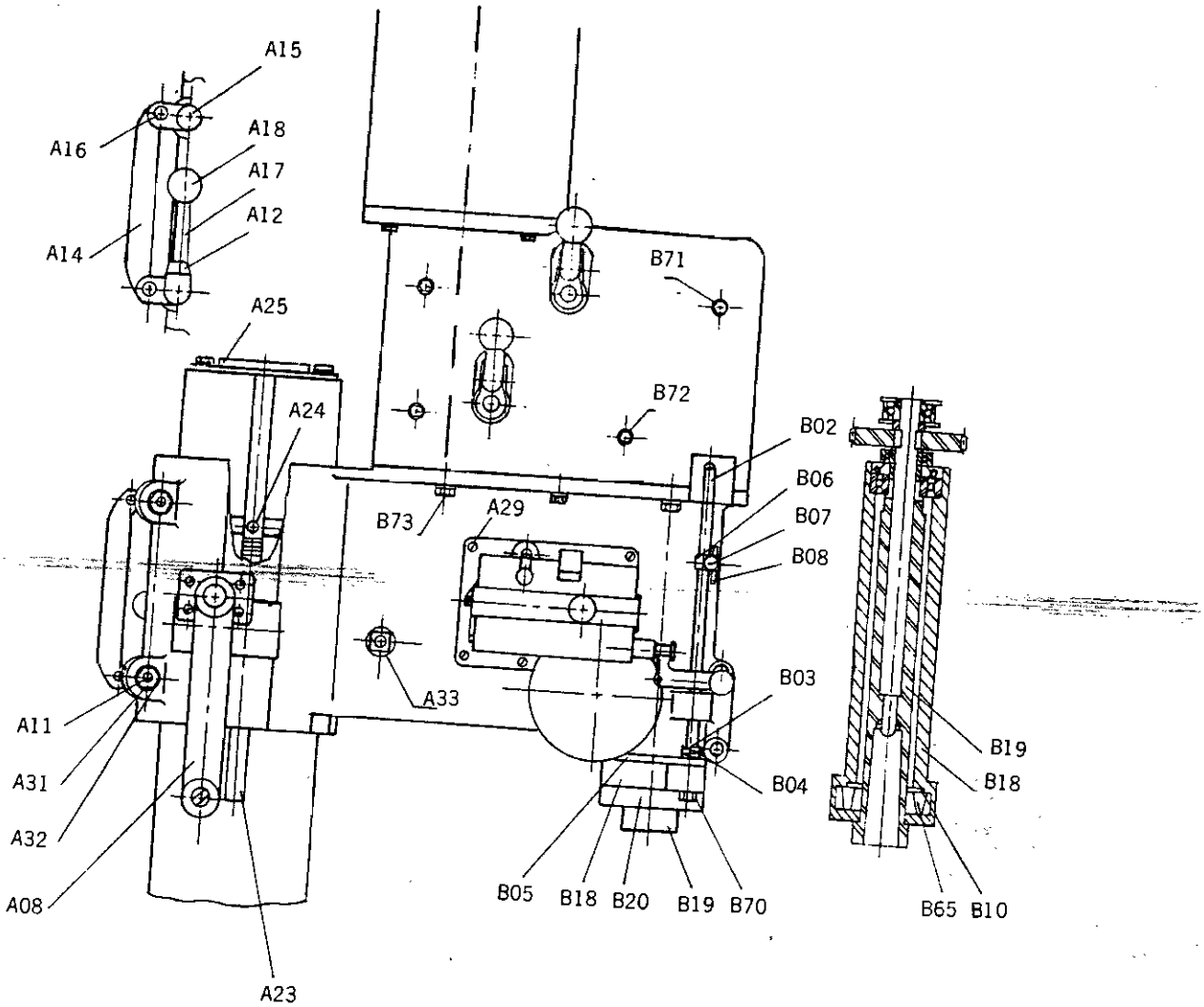
A15
A16
A18
A17
A12
A14
A25
A24
B71
B72
B02
B06
B07
B08
B73
A29
A33
B03
B04
A11
A31
A32
A08
A23
B05
B18
B20
B19
B70
B19
B18
B65
B10

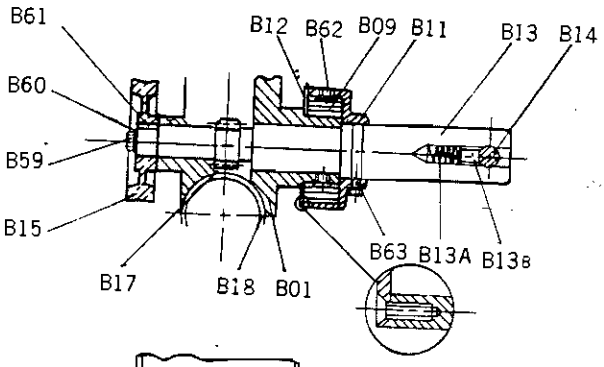
B61
B60
B59
B15
B12
B62
B09
B11
B13
B14
B17
B18
B01
B63
B13A
B13B

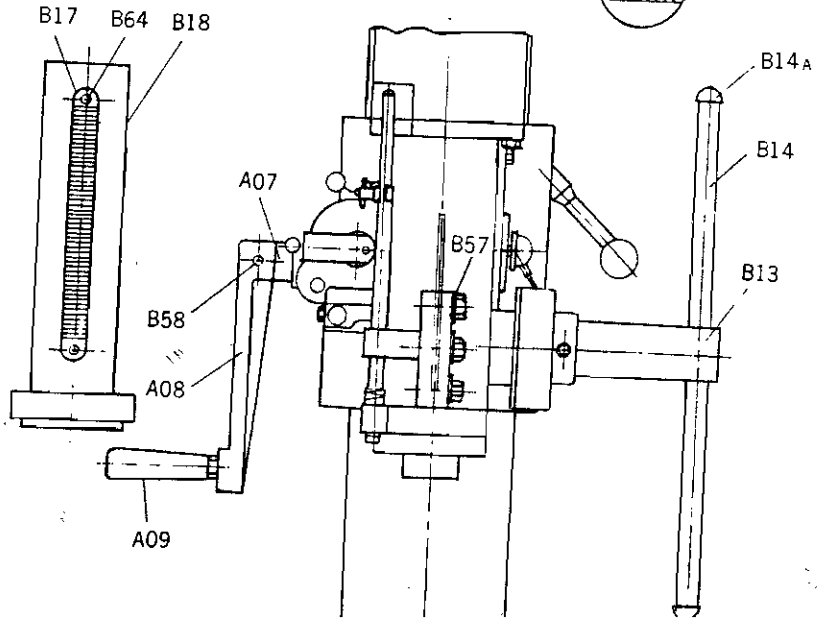
B17
B64
B18
A07
B58
A08
A09
B57
B14A
B14
B13

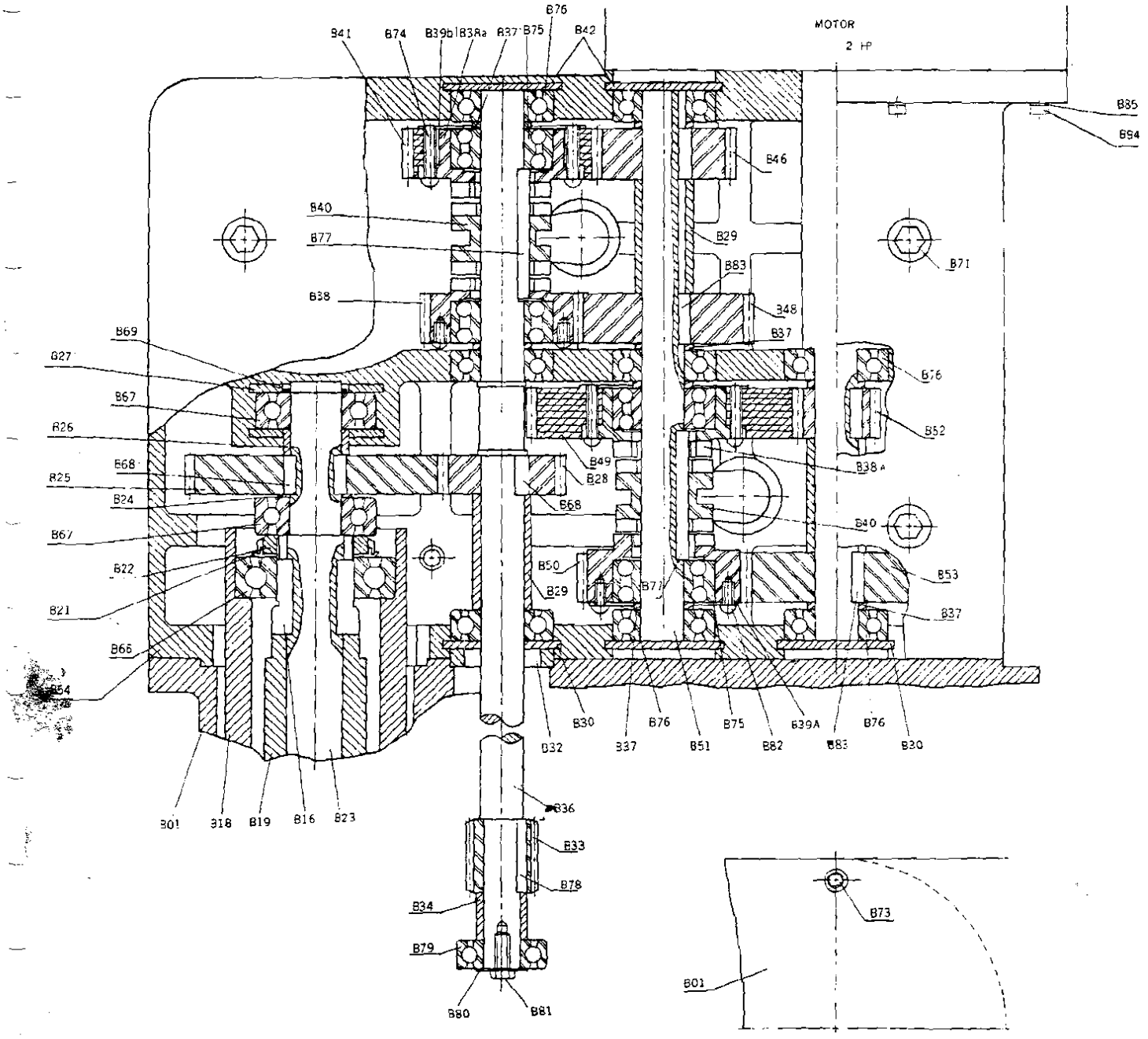
MOTOR
2 HP
B76
B41
B74
B39b
B38a
B37
B75
B42
B85
B94
B46
B40
B77
B29
B71
B83
B38
B48
B37
B69
B27
B76
B67
B52
B26
B49
B38A
B68
B28
B25
B68
B24
B40
B67
B53
B22
B50
B29
B37
B21
B66
B54
B30
B76
B75
B39A
B76
B32
B37
B51
B82
B83
B30
B01
B18
B19
B16
B23
B36
B33
B78
B34
B79
B80
B81
B73
B01

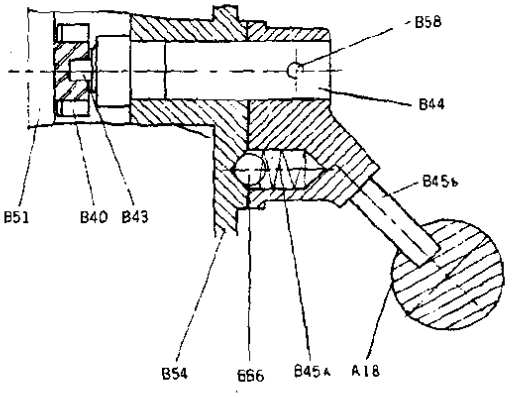
B58
B44
B45b
B51
B40
B43
B54
B66
B45A
A18

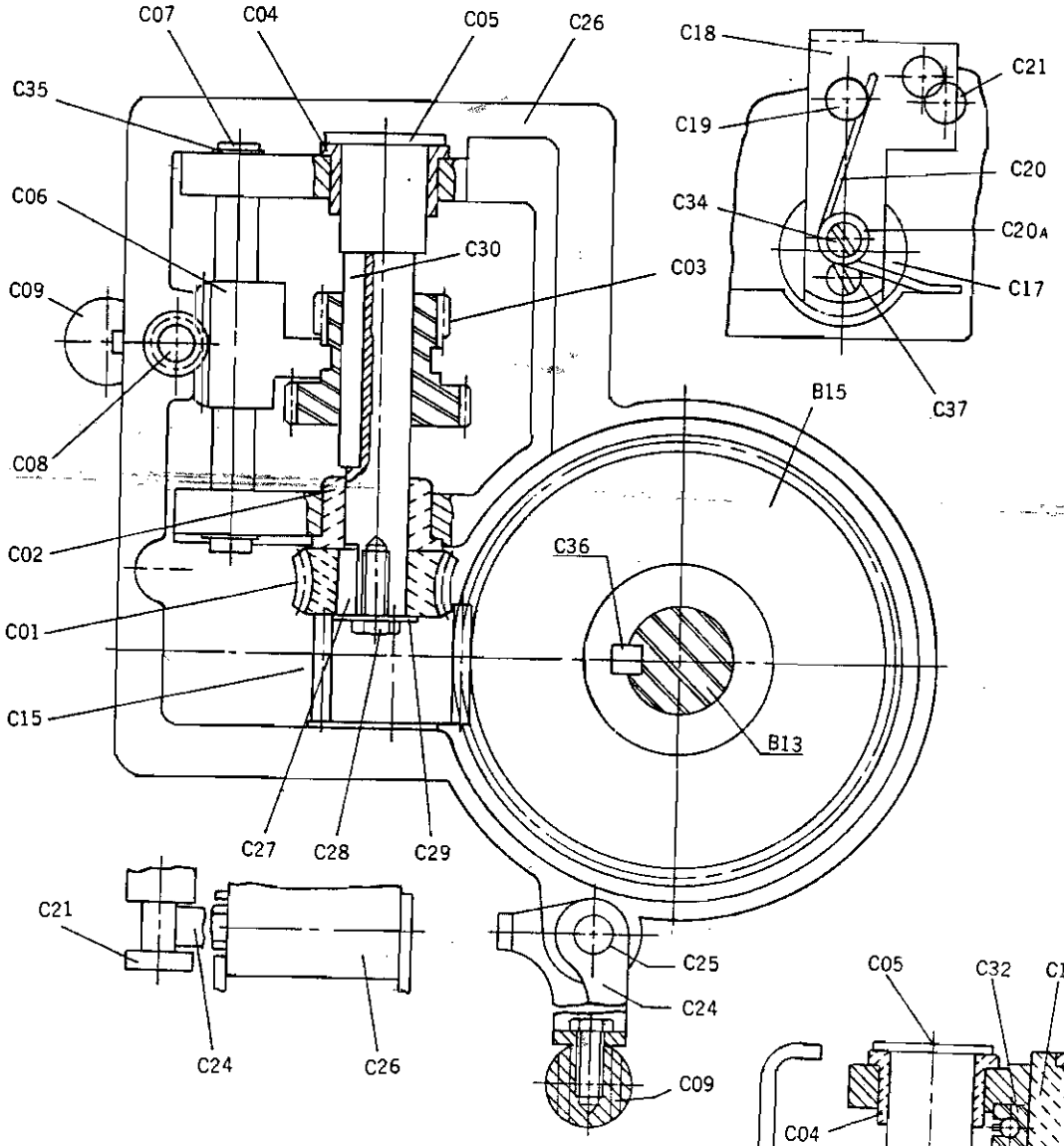
C07
C04
C05
C26
C35
C06
C09
C08
C30
C03
C02
C01
C15
C27
C28
C29
C36
B15
B13
C21
C24
C26
C25
C24
C09
C18
C21
C19
C20
C34
C20A
C17
C37

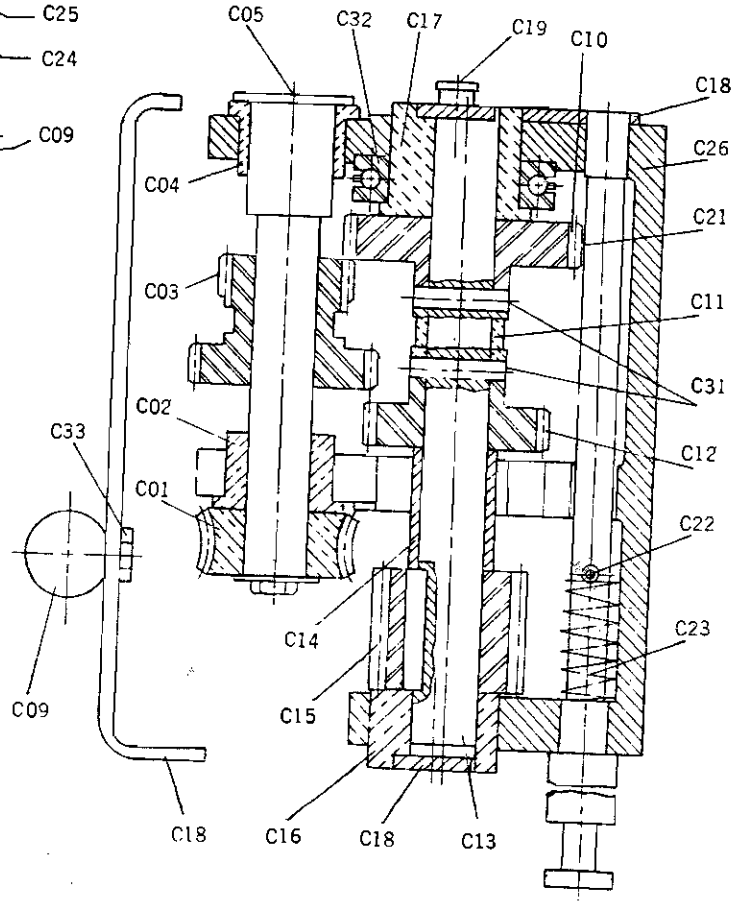
C05
C32
C17
C19
C10
C18
C26
C04
C21
C03
C11
C31
C02
C12
C33
C01
C22
C14
C23
C09
C15
C18
C16
C18
C13

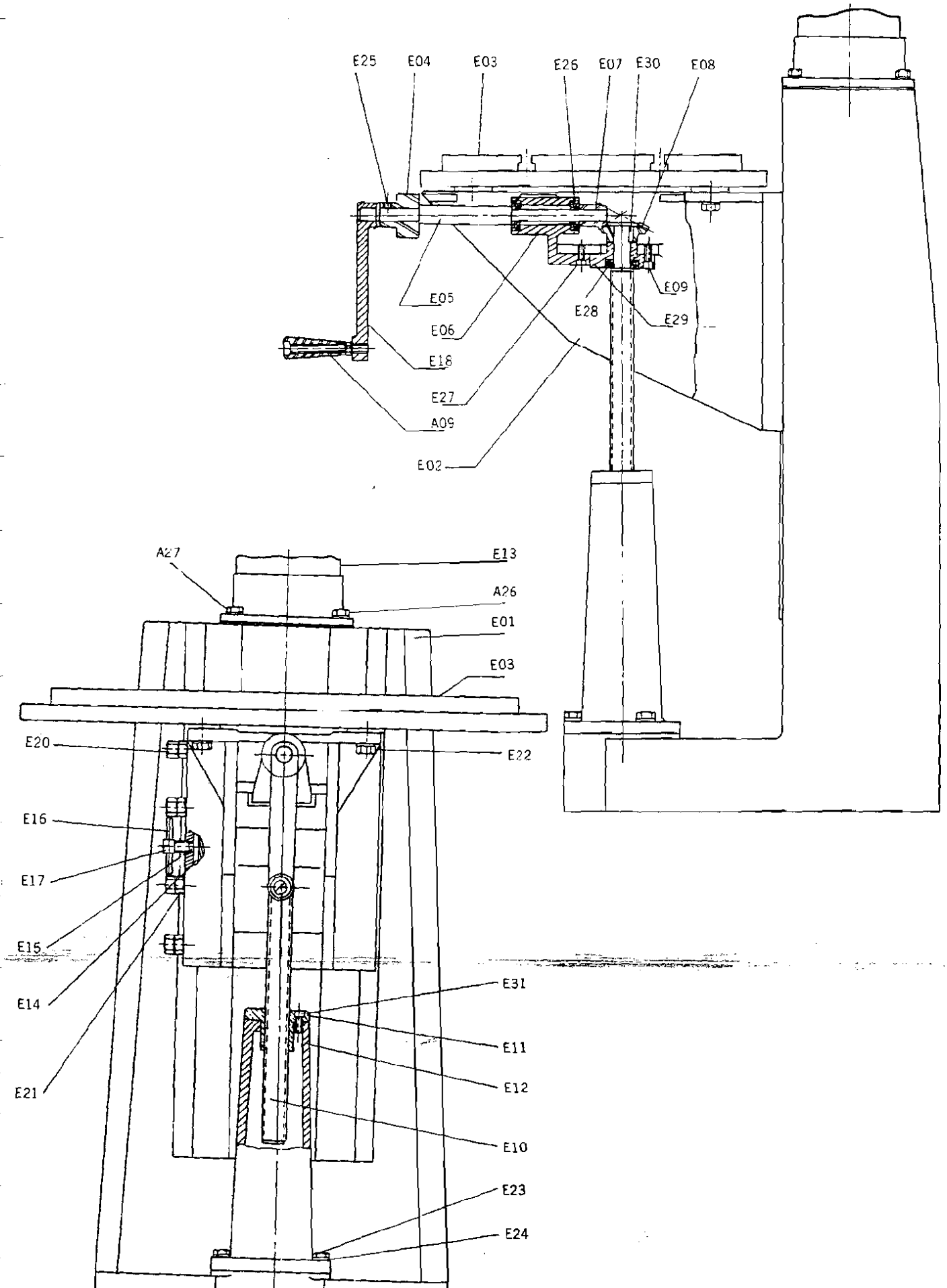
E25
E04
E03
E26
E07
E30
E08
E05
E06
E18
E27
A09
E02
E09
E28
E29
A27
E13
A26
E01
E03
E20
E22
E16
E17
E15
E14
E21
E31
E11
E12
E10
E23
E24

A01	BASEPLATE
A02	COLUMN
A03	RACK SLEEVE
A04	RACK
A05	INTERMEDIATE GEAR
A06	WORM
A07	WORM BRACKET
A08	HANDLE CRANK
A09	HAND BAR
A10	TABLE BASE
A11	BOLT
A12	LOCK BLOCK
A13	CRANK
A14	CRANK
A15	SUB LOCK NUT
A16	SET SHAFT
A17	HAND BAR
A18	PLASTIC HAND BALL
A19	LOCK BOLT
A20	LOCK BOLT
A21A	ϕ15 3/4"TABLE
A21B	20"×16"TABLE
A22	RACK BUSH
A23	RACK
A24	RACK SUSPENSION PIVOT
A25	WIRE GUARD
A26	5/8"-11NC×2"L SCREW
A27	5/8" SPRING WASHER
A28	1/4-20NC×3/4"L SCREW
A29	3/16-24NC×3/4" SCREW
A30	SET SCREW
A31	3/8" NUT
A32	3/8" WASHER
A33	PLASTIC COCK

B01	HEAD
B02	INDECATOR BAR
B03	BAR BUSH
B04	SPRING
B05	PUNCH BLOCK
B06	LIMIT BLOCK
B07	SET SCREW
B08	SCREW HANDLE
B09	CLOCK SPRING
B10	BEARING COVER
B11	SPRING BOX
B12	SPRING BOX COVER
B13	PINION SHAFT
B14	HANDLE
B14A	HANDLE COCK
B15	WORM GEAR
B16	NUT
B17	RACK
B18	QUILL
B19	SPINDLE
B20	SPINDLE COVER
B21	WASHER
B22	BEARING LOCK NUT
B23	SHAFT
B24	SPACER
B25	GEAR
B26	SPACER
B27	SET RING
B28	GEAR
B29	SPACER
B30	SET SPACER
B32	SET SPACER
B33	WORM
B34	WORM SPACER
E35	SET SPACER
B36	SHAFT
B37	BEARING SPACER
B38	GEAR
B38A	GEAR CLUTCH
B39A	BEARING COVER
B39B	BEARING COVER
B40	SPEED CHANGE CLUTCH
B41	GEAR
B42	SET PLATE
B43	CHANGE SPEED PIVOT
B44	CHANGE SPEED CRANK
B45	CHANGE SPEED HANDLE
B45A	SPRING
B46	GEAR
B47	SPACER
B48	GEAR
B49	GEAR
B50	GEAR
B51	SHAFT
B52	GEAR
B53	GEAR
B54	GEAR BOX(LEFT)
B56	GEAR BOX(RIGHT)
B57	3/8-16NC× 1" L SCREW
B58	#5 SPRING PIN
B59	5/16-18NC× 1/2" L SCREW
B60	5/16" WASHER
B61	□7× 17L KEY
B62	3/16-24NC× 3/8" L SCREW
B63	3/8-16NC× 1/2" L SET SCREW
B64	1/4-20NC× 1/2" L SCREW
B65	#30208 TAPER ROLLER
B66	#6206 BEARING
B67	#6204 BEARING
B68	□5× 15L KEY
B69	#2D SNAP RING
B70	1/4" NUT
B71	3/8-16NC× 3 1/2" L SCREW
B72	3/8-16NC× 4 1/2" L SCREW
B73	1/4-20NC× 1 1/4" L SCREW
B74	3/16-24NC× 7/8" L SCREW
B75	#5203 BEARING
B76	#6203 BEARING
B77	□5× 50L KEY
B78	□4× 28L KEY
B79	#6202ZZ BEARING
B80	1/4" WASHER
B81	1/4-20NC× 1/2" L SCREW
B82	3/16-24NC× 1/2" L SCREW
B83	□5× 19L KEY
B84	1/4-20NC× 1 1/4" L SCREW

C01	WORM CEAR	C20A	SET PIVOT
C02	BRASS BUSH	C21	SET PIVOT
C03	CHANGE SPEED GEAR	C22	SET PIN
C04	BRASS BUSH	C23	SPRING
C05	SHAFT	C24	LIMIT SET BLOCK
C06	RACK	C25	LOCK SCREW
C07	SHAFT	C26	WORM BOX
C08	CHANGE SPEED PIVOT	C27	5×14L PIN
C09	KNOB	C28	1/4-20NC×1/2"L SCREW
C10	GEAR	C29	ϕ 1/4 WASHER
C13	SHAFT	C30	□5×50L KEY
C14	WORM SPACER	C31	#4 SPRING PIN
C15	WORM	C32	#51106 BEARING
C16	BUSH	C33	1/4-20NC 1/2"L SCREW
C17	BUSH	C34	3/16-24NC 5/8"
C18	SHAFT	C35	#10 SNAP RING
C19	SPRING PIVOT	C36	□7×17L KEY
C20	SPRING	C37	3/16-24NC 3/8"L SCREW

E01	COLUMN	E17	SET SCREW
E02	KNEE	E18	HANDLE CRANK
E03	TABLE	E19	WIRE GUADE
E04	DIAL WITH 50 GRADUATIONS	E20	3/8-16NC×1 1/2"L SCREW
E05	SHAFT	E21	3/8" NUT
E06	SHAFT BRACKET	E22	1/2-12NC×1 1/4"L SCREW
E07	BEVEL PINION	E23	3/8-16NC×1 1/2"L SCREW
E08	BEVEL GEAR	E24	3/8" WASHER
E09	BEARING RETAINER RING	E25	1/4-20NC×1/2" L SCREW
E10	ELEVATING SCREW	E26	#6203Z BEARING
E11	ELEVATING SCREW NUT	E27	3/8-16NC×1 1/4"L SCREW
E12	ELEVATING SCREW HOUSING	E28	#51105 BEARING
E13	COLUMN	E29	5/16-18NC×1"L SCREW
E14	GIB	E30	□7×7 KEY
E15	SET BLOCK	E31	3/8-16NC×1"L SCREW
E16	HAND BAR		